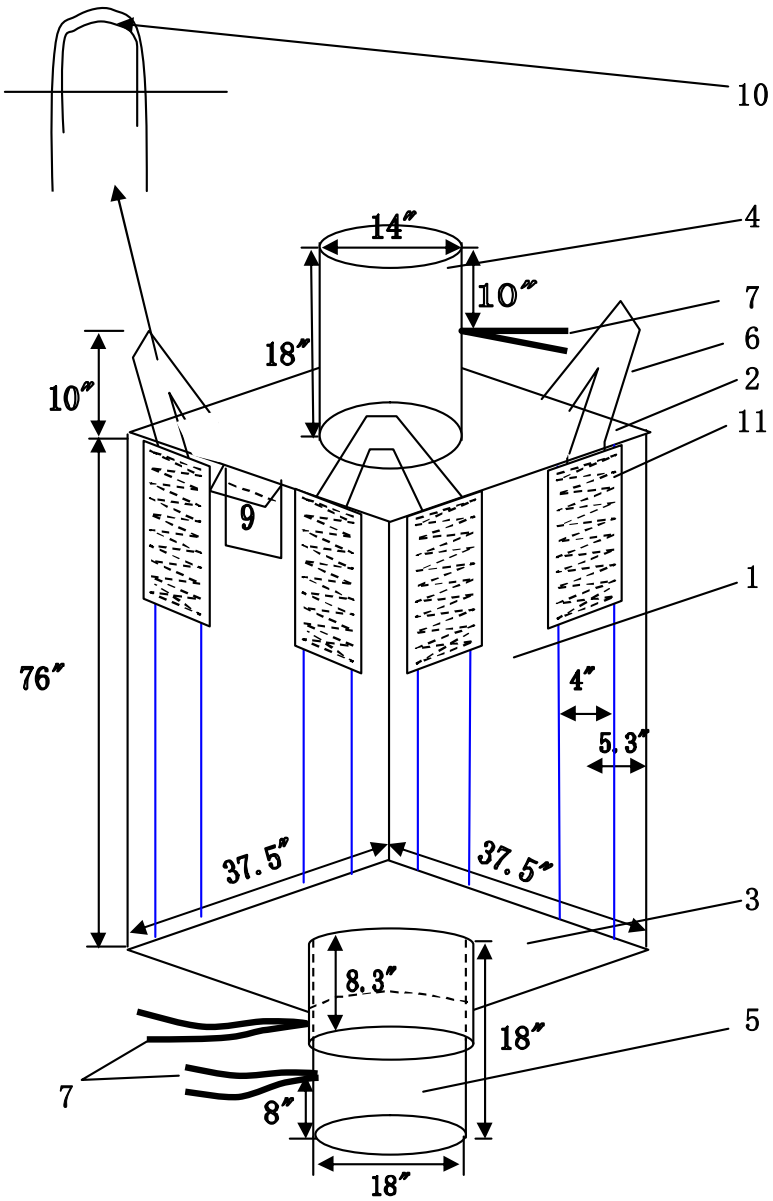

NO	PARTS NAME	MATERIAL	QUTY	COLOR
1	MAIN ABODY	6 OZ uncoated, blue tram line indicator. Reinforced w/8 tram lines , 1/5xbody gsm	1	WHITE
2	TOP PANEL	2.5 OZ coated cone top oversize 45"X45"	1	WHITE
3	BOTTOM PANEL	6 OZ uncoated	1	WHITE
4	FILLING SPOUT	2.5 OZ coated	1	WHITE
5	DISCHARGE SPOUT	2.5 OZ coated skirt type	1	WHITE
6	LIFTING STRAPS	2.75" WIDTH	4	BLACK
7	TIE TAPES	1/2" WIDTH	3	WHITE
8	DISCHARGE ROPE			
9	DOCUMENT POUCH	12"x13"Hx4mil pe	1	
10	REINFORCED BELT	2.75" WIDTH	4	BLACK
11	REINFORCED FABRIC	6 OZ uncoated 6.7"X13.8"H	8	WHITE
12	SPOUT COVER			
13	REINFORCING PATCH			
14	SLIDE TUBE			
15	SIFT TAB			
	Siftproof cord at bottom			

Foison Packaging Inc.

MODEL	DATE
BULK BAG 37.5″X37.5″X76″	12/12/2007